# MODULE - 2

# DIGITAL-TO-DIGITAL CONVERSION

- Digital data can be represented by using digital signals. The conversion involves three techniques:
- line coding, block coding, and scrambling.
- Line coding is always needed; block coding and scrambling may or may not be needed .

# Line Coding

- **Line coding** is the process of converting digital data to digital signals. We assume that data, in the form of text, numbers, graphical images, audio, or video, are stored in computer memory as sequences of bits.
- Line coding converts a sequence of bits to a digital signal. At the sender, digital data are encoded into a digital signal; at the receiver, the digital data are recreated by decoding the digital signal.

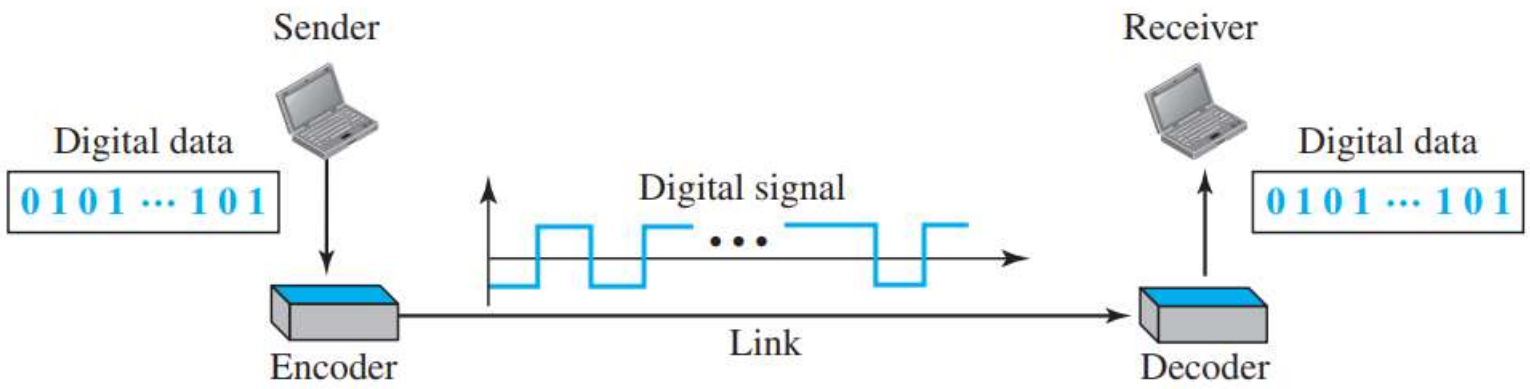

# *Characteristics*

- ***Signal Element Versus Data Element***
- A data element is the smallest entity that can represent a piece of information: this is the bit.
- In digital data communications, a signal element carries data elements.
- data elements are what we need to send; signal elements are what we can send. Data elements are being carried; signal elements are the carriers.
- We define a ratio *r* which is the number of data elements carried by each signal element.

# ***Characteristics*** cont

***Data Rate Versus Signal Rate***

- The **data rate** defines the number of data elements (bits) sent in 1s.
- The **signal rate** is the number of signal elements sent in 1s.
- The data rate is sometimes called the **bit rate;** the signal rate is sometimes called the **pulse rate,** the **modulation rate.**
- One goal in data communications is to increase the data rate while decreasing the signal rate. Increasing the data rate increases the speed of transmission; decreasing the signal rate decreases the bandwidth requirement.
- The relationship between data rate (*N*) and signal rate (*S*)

  S=N/r in which r number of data elements per signal element..

To derive a formula for the relationship, we need to define three cases: the worst, best, and average. The worst case is when we need the maximum signal rate; the best case is when we need the minimum. In data communications, Consider the average case.
formulate the relationship between data rate and signal rate as

$$S_{ave} = c \times N \times (1/r) \quad \text{baud}$$

A signal is carrying data in which one data element is encoded as one signal element ($r = 1$). If the bit rate is 100 kbps, what is the average value of the baud rate if $c$ is between 0 and 1?

**Solution**

We assume that the average value of $c$ is 1/2. The baud rate is then

$$S = c \times N \times (1 / r) = 1/2 \times 100{,}000 \times (1/1) = 50{,}000 = 50 \text{ kbaud}$$

***Bandwidth***

The bandwidth is theoretically infinite. The effective bandwidth is finite.

Although the actual bandwidth of a digital signal is infinite, the effective bandwidth is finite.

Bit Rate and Baud rate

- Bit Rate (bps): Number of bits transmitted per second.
- Baud Rate (baud / symbols per second): Number of signal changes (symbols) per second.
- Bandwidth is directly tied to how *often the signal changes*, not how many bits are carried. That’s why baud rate determines required bandwidth, not bit rate.

- The minimum bandwidth can be given as

$$B_{min} = c \times N \times (1 / r)$$

We can solve for the maximum data rate if the bandwidth of the channel is given.

$$N_{max} = (1 / c) \times B \times r$$

# Baseline Wandering

- In decoding a digital signal, the receiver calculates a running average of the received signal power. This average is called the ***baseline*.**
- The incoming signal power is evaluated against this baseline to determine the value of the data element.
- A long string of 0s or 1s can cause a drift in the baseline (**baseline wandering**) and make it difficult for the receiver to decode correctly

# *DC Components*

- When the voltage level in a digital signal is constant for a while, the spectrum creates very low frequencies.
- These frequencies around zero is called DC (direct-current) *components. This* present problems for a system that cannot pass low frequencies .
- For example, a telephone line cannot pass frequencies below 200 Hz.
- For these systems, we need a scheme with no **DC component.**

# *Self-synchronization*

- To correctly interpret the signals received from the sender, the receiver's bit intervals must correspond exactly to the sender's bit intervals.
- If the receiver clock is faster or slower, the bit intervals are not matched and the receiver might misinterpret the signals.

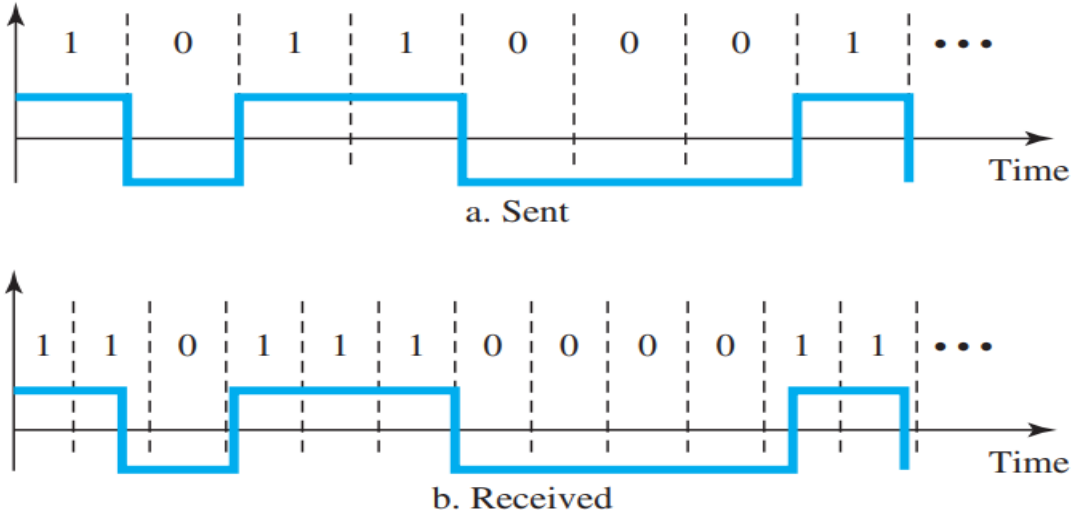


A **self-synchronizing** digital signal includes timing information in the data being transmitted.

Problem

- In a digital transmission, the receiver clock is 0.1 percent faster than the sender clock. How many extra bits per second does the receiver receive if the data rate is 1 kbps? How many if the data rate is 1 Mbps?
  **Solution**
- At 1 kbps, the receiver receives 1001 bps instead of 1000 bps

| | | | | |
|---|---|---|---|---|
| **1000 bits sent** | → | **1001 bits received** | → | **1 extra bps** |

At 1 Mbps, the receiver receives 1,001,000 bps instead of 1,000,000 bps.

| | | | | |
|---|---|---|---|---|
| **1,000,000 bits sent** | → | **1,001,000 bits received** | → | **1000 extra bps** |

**Built-in Error Detection**

It is desirable to have a built-in error-detecting capability in the generated code to detect some or all of the errors that occurred during transmission .

**Immunity to noise and interference** means how well a system can resist these unwanted signals and still correctly receive the original data.

**Complexity**

A complex scheme is more costly to implement than a simple one. For example, a scheme that uses four signal levels is more difficult to interpret than one that uses only two levels.

# Line Coding Schemes

- We can roughly divide line coding schemes into five broad categories.

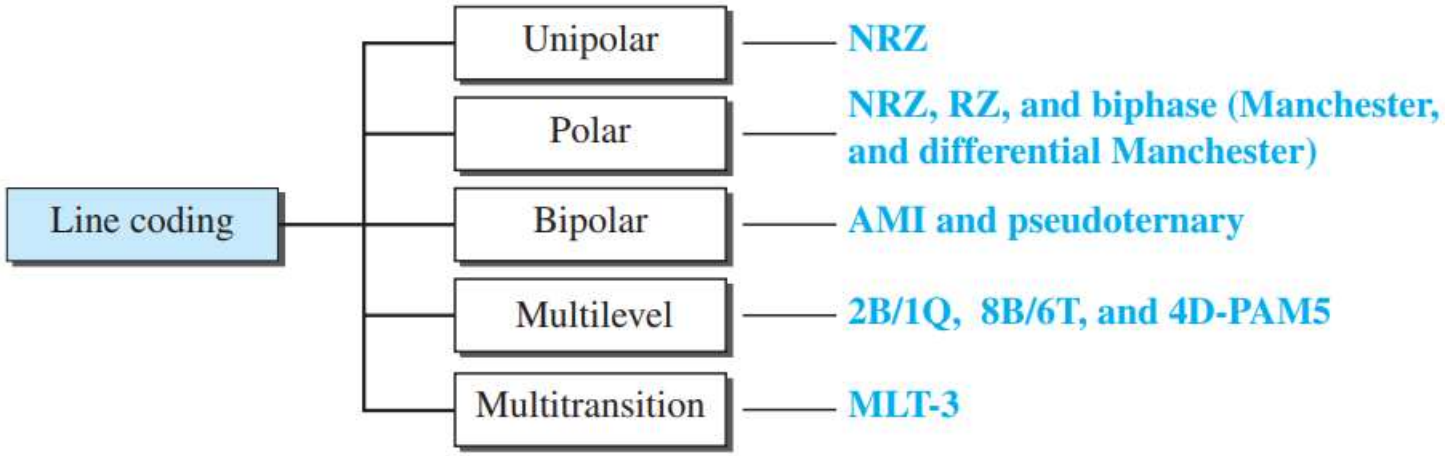


•Line coding is the process of **converting digital data (0s and 1s) into a digital signal (waveform)** that can be transmitted over a communication channel.
•Different line coding methods are used to solve problems like **DC component, synchronization, and noise immunity**

# Polar Schemes

- In polar schemes, the voltages are on both sides of the time axis.
- For example, the voltage level for 0 can be positive and the voltage level for 1 can be negative.

***Non-Return-to-Zero (NRZ)***

- In **polar NRZ** encoding, we use two levels of voltage amplitude
- two versions of polar NRZ: NRZ-L and NRZ-I

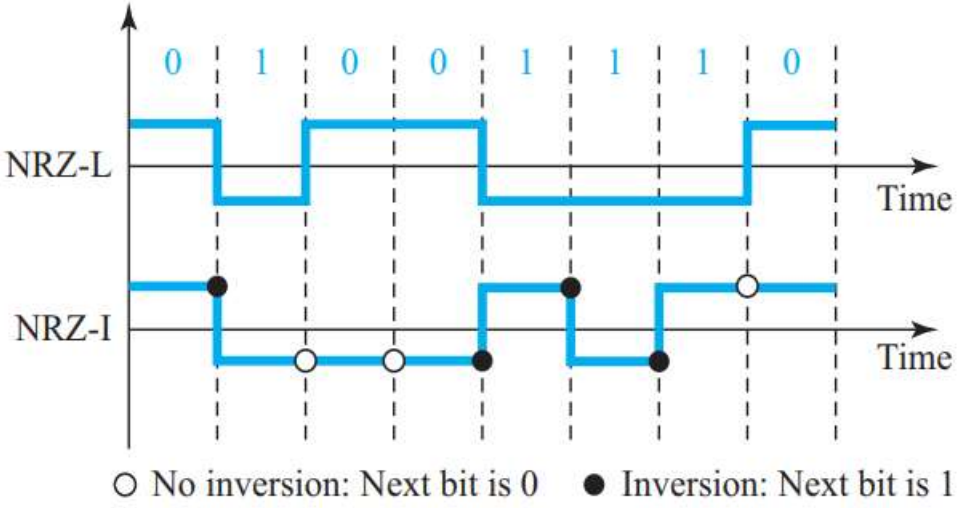


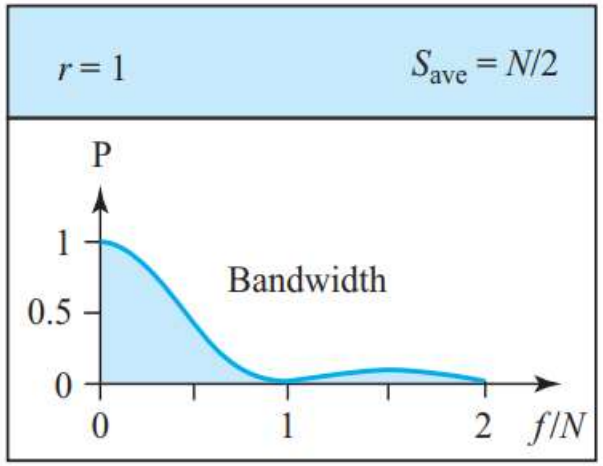

- In the first variation, NRZ-L (**NRZ-Level**), the level of the voltage determines the value of the bit.
- In the second variation, NRZ-I (**NRZ-Invert**), the change or lack of change in the level of the voltage determines the value of the bit.
- If there is no change, the bit is 0; if there is a change, the bit is 1.

PROBLEM

A system is using NRZ-I to transfer 10-Mbps data. What are the average signal rate and minimum bandwidth?

**Solution**

The average signal rate is $S = N/2 = 500$ kbaud. The minimum bandwidth for this average baud rate is $B_{min} = S = 500$ kHz.

# Return-to-Zero (RZ)

- The main problem with NRZ encoding occurs when the sender and receiver clocks are not synchronized.
- One solution is the **return-to-zero (RZ)** scheme,
- it uses three values: positive, negative, and zero.
- In RZ, the signal changes not between bits but during the bit.
-

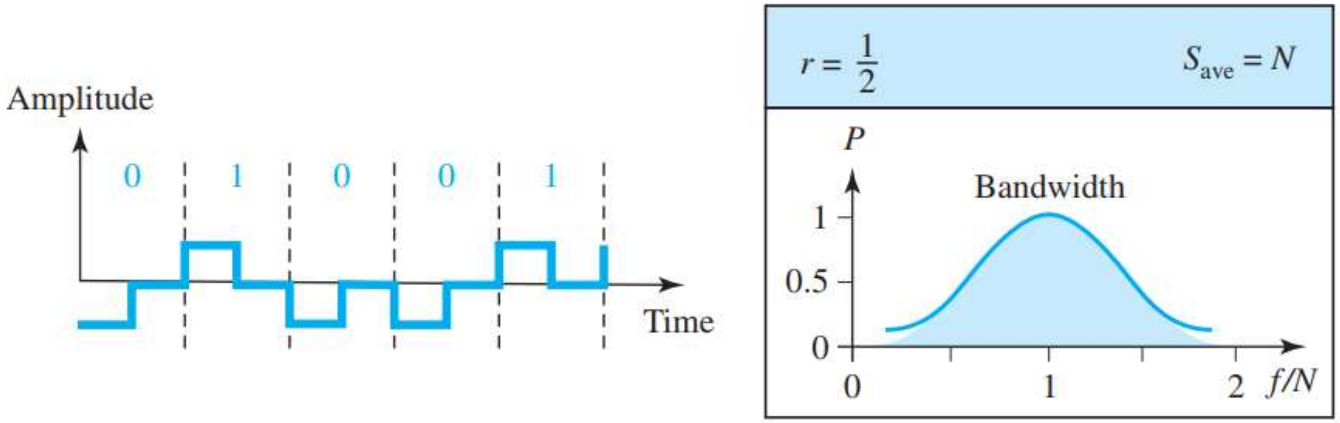


- Here the signal goes to 0 in the middle of each bit. It remains there until the beginning of the next bit.

# Return-to-Zero (RZ)

- RZ encoding is that it requires two signal changes to encode a bit and therefore occupies greater bandwidth.
- no DC component problem.
- Problem is the complexity: RZ uses three levels of voltage, which is more complex to create and discern. As a result of all these deficiencies, the scheme is not used today. Instead, it has been replaced by the better-performing Manchester and differential Manchester schemes

# Biphase: Manchester and Differential Manchester

- To Solve the problems like baseline wandering ,synchronization, and sometimes DC component issues. we have
- Manchester
- Differential Manchester

## Manchester Encoding

- The idea of RZ (transition at the middle of the bit) and the idea of NRZ-L are combined into the Manchester scheme the duration of the bit is divided into two halves.
- The voltage remains at one level during the first half and moves to the other level in the second half.
- The transition at the middle of the bit provides synchronization.

0 → High in first half, Low in second half.

1 → Low in first half, High in second half.

**Advantages:**

- No DC component (because positive and negative parts balance out).
- Easy to synchronize (because every bit has a mid-transition).
- No baseline wandering.

# Differential Manchester

- Combines the ideas of RZ and NRZ-I.
- There is  a transition at the middle of the bit, but the bit values are determined at the beginning of the bit.
- If the bit is 0 → A transition at the beginning of the bit.
- If the bit is 1 → No transition at the beginning.

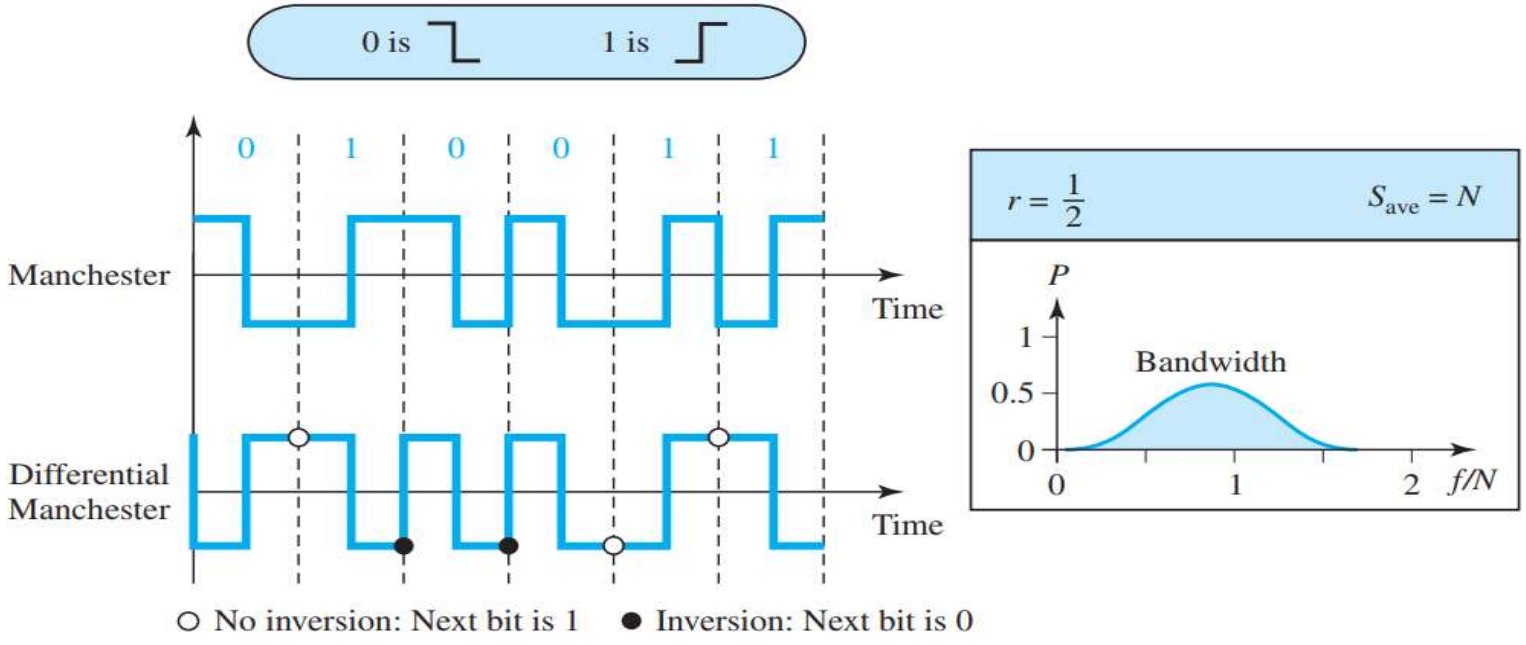

- The Manchester and differential Manchester schemes are also called **biphase** schemes.

Disadvantage:

- The signal rate is double

# Bipolar Schemes

In **bipolar** encoding (also called *multilevel binary*), there are three voltage levels: positive, negative, and zero.

The voltage level for one data element is at zero, while the voltage level for the other element alternates between positive and negative.

Two popular bipolar schemes are:

- AMI (Alternate Mark Inversion)
- Pseudoternary

## AMI (Alternate Mark Inversion)

A common bipolar encoding scheme is called bipolar alternate mark inversion (AMI) .Here the word mark indicates 1. So AMI means alternate 1 inversion. A neutral zero voltage represents binary 0. Binary 1s are represented by alternating positive and negative voltages.

0 → 0 voltage (neutral).
1 → a+ve and -ve voltages.

- **Pseudoternary**
- A variation of AMI encoding is called pseudoternary in which the 1 bit is encoded as a zero voltage and the 0 bit is encoded as alternating positive and negative voltages.

1 → 0 voltage (neutral).

0 → a+ve and -ve voltages.

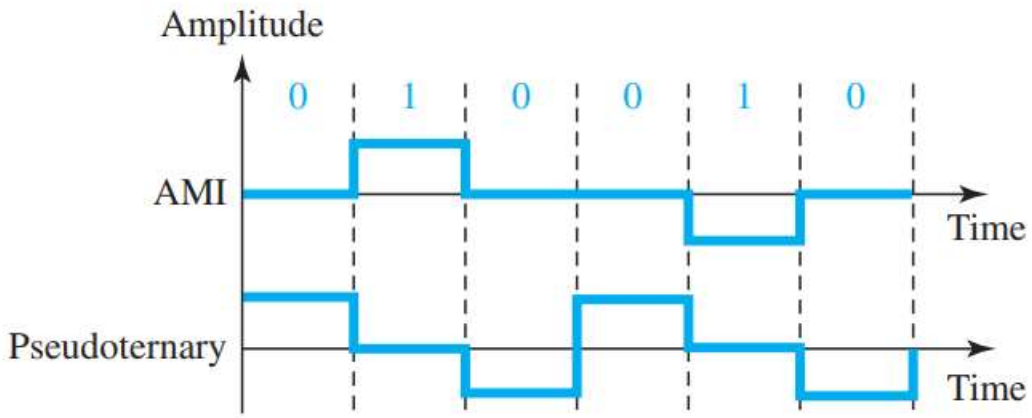


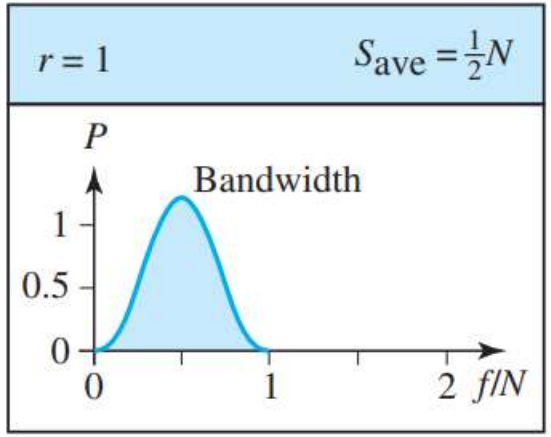


The bipolar scheme was developed as an alternative to NRZ. The bipolar scheme has the same signal rate as NRZ, but there is no DC component because If we have a long sequence of 1s, the voltage level alternates between positive and negative; it is not constant. Therefore, there is no DC component. For a long sequence of 0s, the voltage remains constant, but its amplitude is zero, which is the same as having no DC component.

# Analog-To-Digital Conversion

- An analog-signal may created by a microphone or camera.
- To change an analog-signal to digital-data, we use PCM (pulse code modulation).
- After the digital-data are created (digitization), then we convert the digital-data to a digital-signal.

## Pulse Code Modulation (PCM)

- PCM is a technique used to change an analog signal to digital data (digitization).
- PCM has encoder at the sender and decoder at the receiver.
- The encoder has 3 processes (Figure 4.21):

1) Sampling
2) Quantization
3) Encoding.

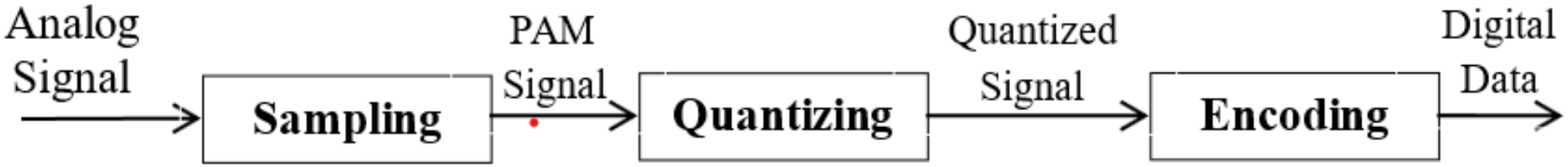

**Figure 4.21** *Components of PCM encoder*

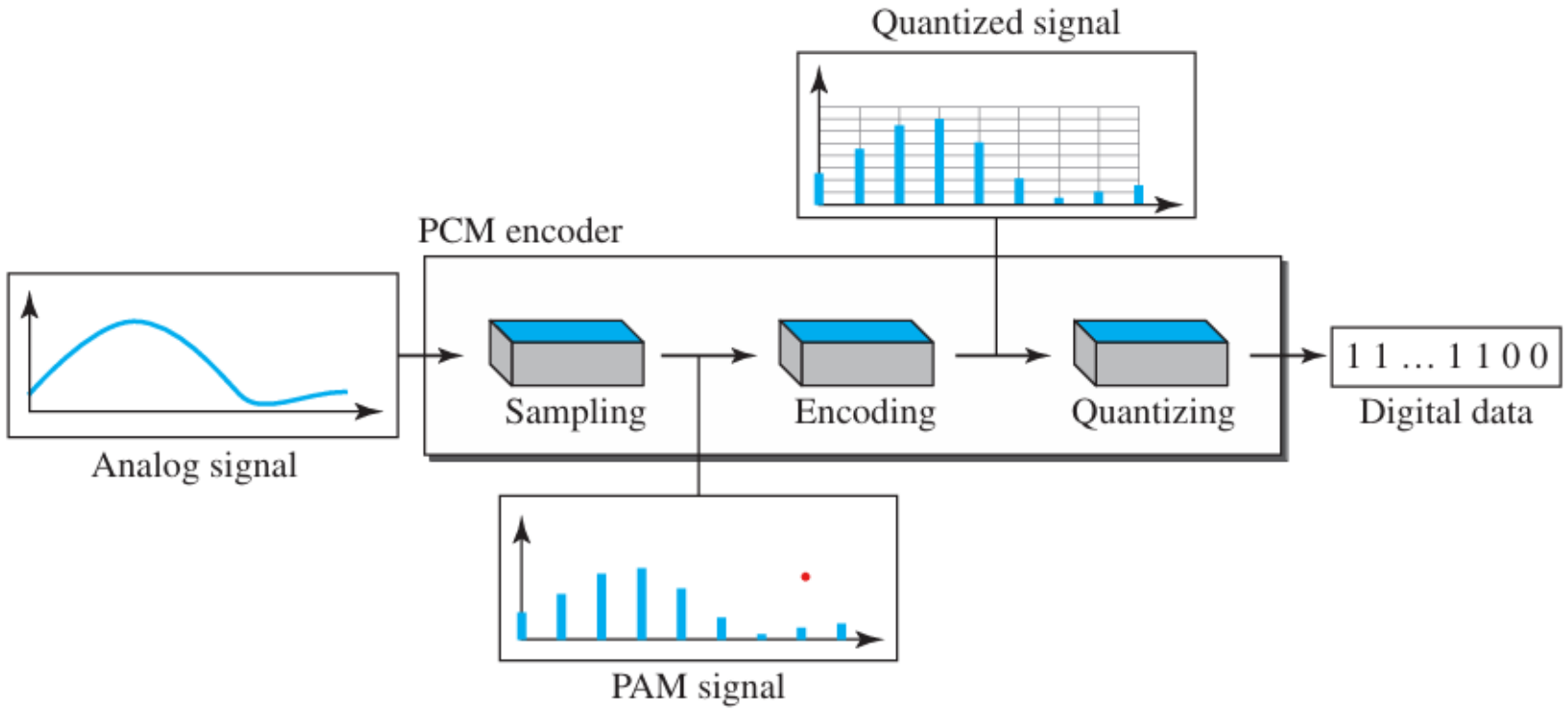


1. The analog signal is sampled.
2. The sampled signal is quantized.
3. The quantized values are encoded as streams of bits.

# Sampling:

- The first step in PCM is sampling. The analog signal is sampled every Ts s, where Ts is the sample interval or period.
- The inverse of the sampling interval is called the sampling rate or sampling frequency and denoted by fs, where fs = 1/Ts.

There are three sampling methods- **ideal, natural, and flat-top.**

**1) Ideal Sampling :** This method is difficult to implement. Pulses from the analog signal are sampled.
**2) Natural Sampling :** A high-speed switch is turned ON for only the small period of time when the sampling occurs. The result is a sequence of samples that retains the shape of the analog-signal.
**3) Flat Top Sampling :** The most common sampling method is sample and hold. Sample and hold method creates flat-top samples. This method is somet:

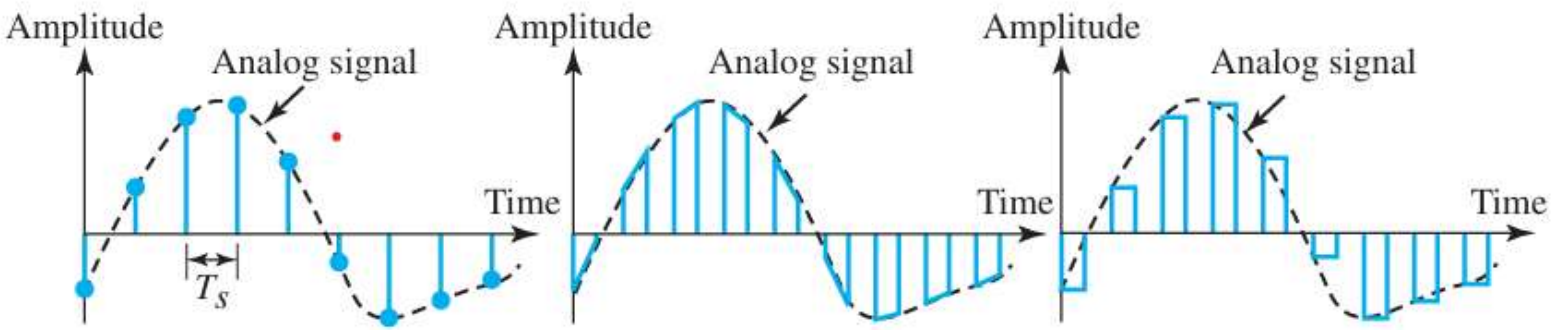


a. Ideal sampling b. Natural sampling c. Flat-top sampling

**Sampling Rate**

- According to Nyquist theorem,

"The sampling-rate must be at least 2 times the highest frequency, not the bandwidth".

i) If the analog-signal **is low-pass**, the bandwidth and the highest frequency are the same value (Figure 4.23a).

ii) If the analog-signal is **bandpass**, the bandwidth value is lower than the value

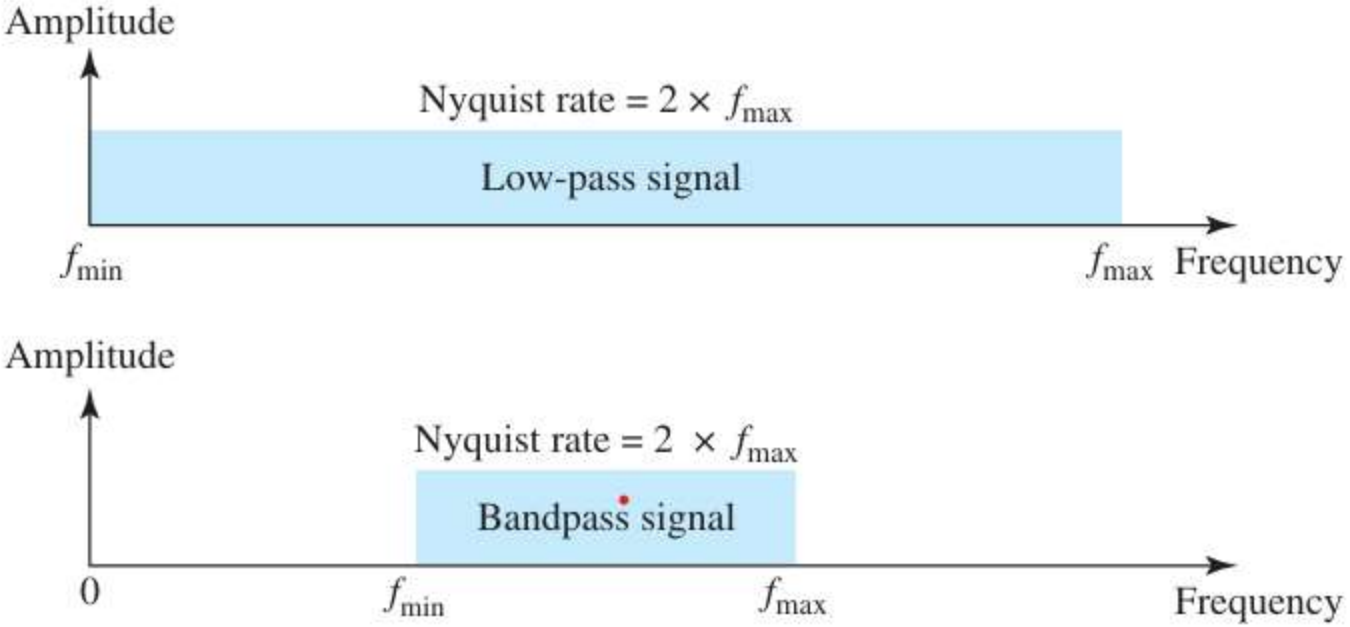


**Figure 4.23** *Nyquist sampling rate for low-pass and bandpass signals*

## 2.1.2 Quantization

- The sampled-signal is quantized.
- Result of sampling is a set of pulses with amplitude-values b/w max & min amplitudes of the signal.
- Four steps in quantization:

1) We assume that the original analog-signal has amplitudes between Vmin & Vmax.

2) $\Delta = \frac{V_{max} - V_{min}}{L}$ range into L zones, each of height Δ(delta).

where L = number of levels.

3) We assign quantized values of 0 to (L-1) to the midpoint of each zone.

4) We approximate the value of the sample amplitude to the quantized values.

- For example: Let Vmin=-20 Vmax =+20 V L=8 Therefore , Δ = [+20-(-20)]/8= 5 V
- In the chart (Figure 4.26),

1) First row is normalized-PAM-value for each sample.

2) Second row is normalized-quantized-value for each sample.

3) Third row is normalized error (which is diff. b/w normalized PAM

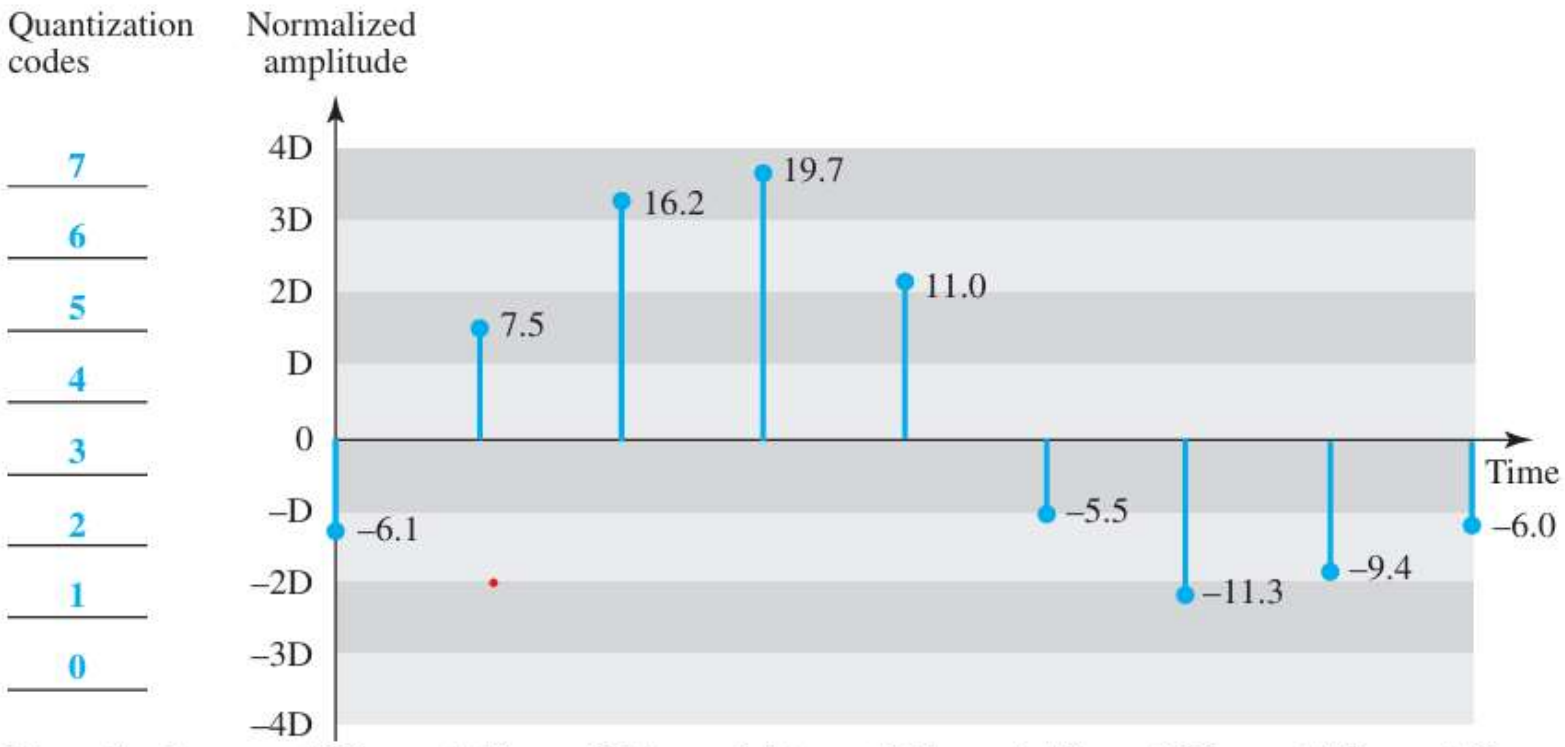


| | | | | | | | | | |
|---|---|---|---|---|---|---|---|---|---|
| Normalized PAM values | –1.22 | 1.50 | 3.24 | 3.94 | 2.20 | –1.10 | –2.26 | –1.88 | –1.20 |
| Normalized quantized values | –1.50 | 1.50 | 3.50 | 3.50 | 2.50 | –1.50 | –2.50 | –1.50 | –1.50 |
| Normalized error | –0.38 | 0 | +0.26 | –0.44 | +0.30 | –0.40 | –0.24 | +0.38 | –0.30 |
| Quantization code | 2 | 5 | 7 | 7 | 6 | 2 | 1 | 2 | 2 |
| Encoded words | 010 | 101 | 111 | 111 | 110 | 010 | 001 | 010 | 010 |

**Figure 4.26** *Quantization and encoding of a sampled signal*

**Quantization Level**

- Let L = number of levels.
- The choice of L depends on
  - → range of the amplitudes of the analog-signal and
  - → how accurately we need to recover the signal.
- If the signal has only 2 amplitude values, we need only 2 quantization-levels.

  If the signal (like voice) has many amplitude values, we need more quantization-levels.
- In audio digitizing, L is normally chosen to be 256.

  In video digitizing, L is normally thousands.
- Choosing lower values of L increases the quantization-error.

**Quantization Error**

- Quantization-error is the difference b/w normalized PAM value & quantized values
- Quantization is an approximation process.
- The input values to the quantizer are the real values.

  The output values from the quantizer are the approximated values.
- The output values are chosen to be the middle value in the zone.
- If the input value is also at the middle of the zone,

  Then, there is no error.

  Otherwise, there is an error.

**Uniform vs. Non Uniform Quantization**

- Non-uniform quantization can be done by using a process called companding and expanding.
  1) The signal is companded at the sender before conversion.
  2) The signal is expanded at the receiver after conversion.

Companding means reducing the instantaneous voltage amplitude for large values.

Expanding means increasing the instantaneous voltage amplitude for small values.

- It has been proved that non-uniform quantization effectively reduces the $SNR_{dB}$ of quantization.

## 2.1.3 Encoding

- The quantized values are encoded as n-bit code word.
- In the previous example,
  A quantized value 2 is encoded as 010.
  A quantized value 5 is encoded as 101.
- Re[illegible] (L) & number of bits (n) is g[illegible]

$$\text{Bit rate} = \text{sampling rate} \times \text{number of bits per sample} = f_s \times n_b$$

  $n=\log_2 L$ or $2^n=L$
- The bit-rate is given by:

**Example 2.1**

A complex low-pass signal has a bandwidth of 200 kHz. What is the minimum sampling rate for this signal?

## Solution

The bandwidth of a low-pass signal is between 0 and $f$, where $f$ is the maximum frequency in the signal. Therefore, we can sample this signal at 2 times the highest frequency (200 kHz). The sampling rate is therefore 400,000 samples per second.

**Example 2.2**

What is the $SNR_{dB}$ in the example of Figure 4.26?

## Solution

We can use the formula to find the quantization. We have eight levels and 3 bits per sample, so $SNR_{dB} = 6.02(3) + 1.76 = 19.82$ dB. Increasing the number of levels increases the SNR.

**Example 2.3**

A telephone subscriber line must have an $SNR_{dB}$ above 40. What is the minimum number of bits per sample?

### Solution

We can calculate the number of bits as

$$\mathbf{SNR_{dB} = 6.02n_b + 1.76 = 40 \quad \rightarrow \quad n = 6.35}$$

Telephone companies usually assign 7 or 8 bits per sample.

**Example 2.4**

We want to digitize the human voice. What is the bit rate, assuming 8 bits per sample?

### Solution

The human voice normally contains frequencies from 0 to 4000 Hz. So the sampling rate and bit rate are calculated as follows:

$$\mathbf{Sampling\ rate = 4000 \times 2 = 8000\ samples/s}$$

$$\mathbf{Bit\ rate = 8000 \times 8 = 64{,}000\ bps = 64\ kbps}$$

## Original Signal Recovery

- PCM decoder is used for recovery of the original signal.
- Here is how it works (Figure 4.27):

1) The decoder first uses circuitry to convert the code words into a pulse that holds the amplitude until the next pulse.

2) Next, the staircase-signal is passed through a low-pass filter to smooth the staircase signal into an analog-signal.

- The filter has the same cut-off frequency as the original signal at the sender.
- If the signal is sampled at the Nyquist sampling-rate, then the original signal will be re-created.
- The maxi be achieved by using amplificat

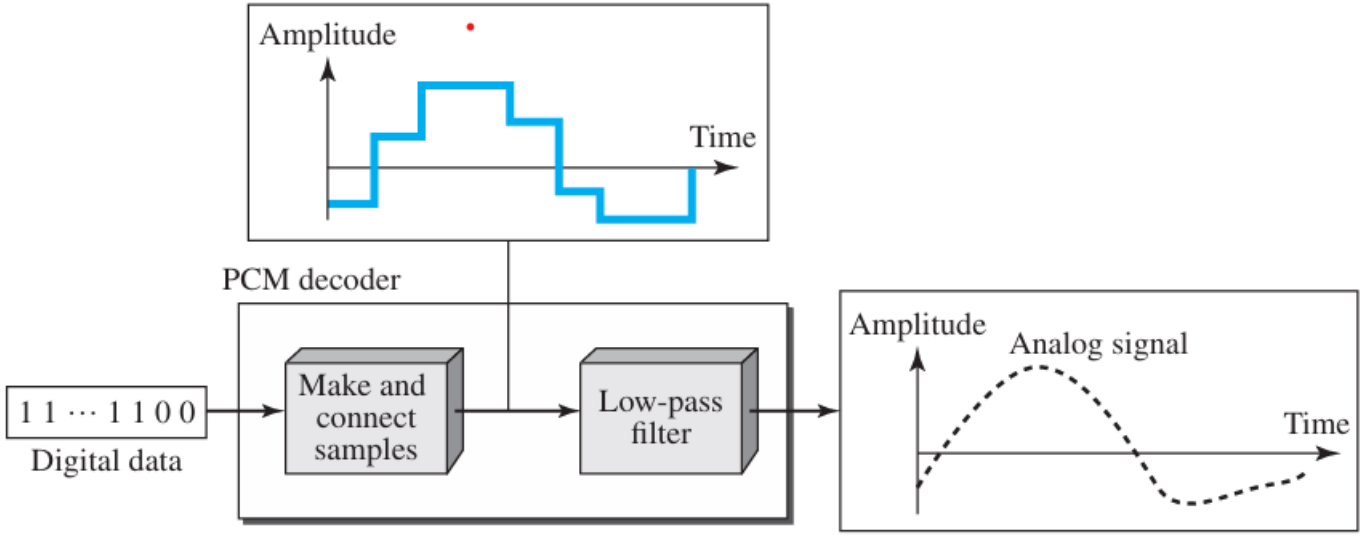


**Figure 4.27** *Components of a PCM decoder*

## PCM Bandwidth

- The minimum bandwidth of a line-encoded signal is

$$B_{min} = c \times N \times \frac{1}{r}$$

- We substitute the value of N in above formula:

$$B_{min} = c \times N \times \frac{1}{r} = c \times n_b \times f_s \times \frac{1}{r} = c \times n_b \times 2 \times B_{analog} \times \frac{1}{r}$$

- When 1/r = 1 (for a NRZ or bipolar signal) and c = (1/2) (the average situation), the minimum bandwidth is

$$B_{min} = n_b \times B_{analog}$$

- This means the minimum bandwidth of the digital-signal is $n_b$ times greater than the bandwidth of the analog-signal.

## Maximum Data Rate of a Channel

- The Nyquist theorem gives the data-rate of a channel as

$$N_{max} = 2 \times B \times \log_2 L$$

- We can deduce above data-rate from the Nyquist sampling theorem by using the following arguments.

1) We assume that the available channel is low-pass with bandwidth B.
2) We assume that the digital-signal we want to send has L levels, where each level is a signalelement. This means r = $1/\log_2 L$.
3) We first pass digital-signal through a low-pass filter to cut off the frequencies above B Hz.
4) We treat the resulting signal as an analog-signal and sample it at 2 x B samples per second and quantize it using L levels.
5) The resulting bit-rate is $N = f_s \times n_b = 2 \times B \times \log_2 L.$

This is the maximum bandwic $N_{max} = 2 \times B \times \log_2 L$ bps

**Minimum Required Bandwidth**

- The previous argument can give us the minimum bandwidth if the data-rate and the number of signal-levels are fixed.

We can say

$$B_{\min} = \frac{N}{(2 \times \log_2) L} \quad \text{Hz}$$

# TRANSMISSION MODES

• Two ways of transmitting data over a link (Figure 4.31): 1) Parallel mode &

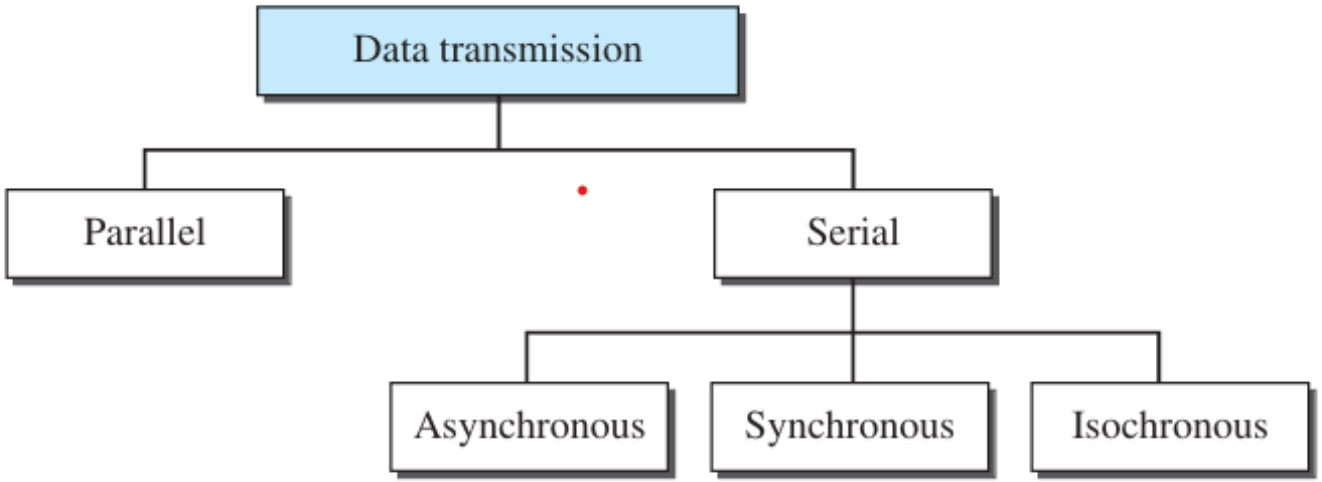


**Figure 4.31** *Data transmission and modes*

**PARALLEL TRANSMISSION**

• Multiple bits are sent with each clock-tick (Figure 4.32).
• "n" bits in a group are sent simultaneously.
• "n" wires are used to send "n" bits at one time.
• Each bit has its own wire.
• Typically, the 8 wires are bundled in a

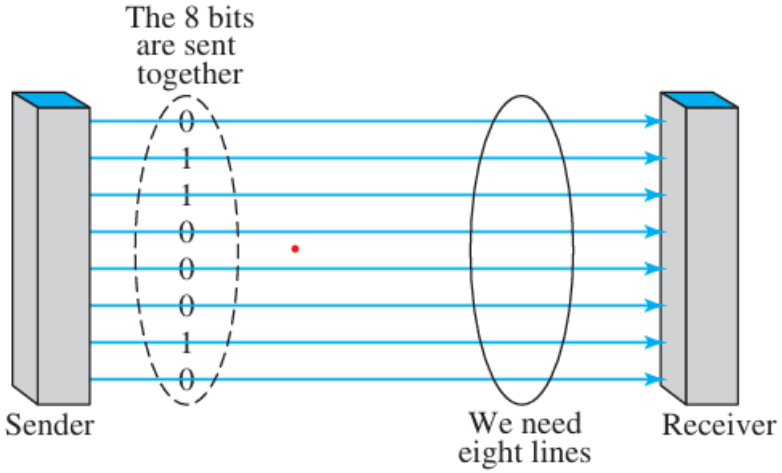


**Figure 4.32** *Parallel transmission*

- Advantage:

1) Speed: Parallel transmission can increase the transfer speed by a factor of n over serial transmission.

- Disadvantage:

1) Cost: Parallel transmission requires n communication lines just to transmit the data-stream. Because this is expensive, parallel transmission is usually limited to short distances.

2) Limited to short distance

**SERIAL TRANSMISSION**

1) One bit is sent with each clock-tick using only a single

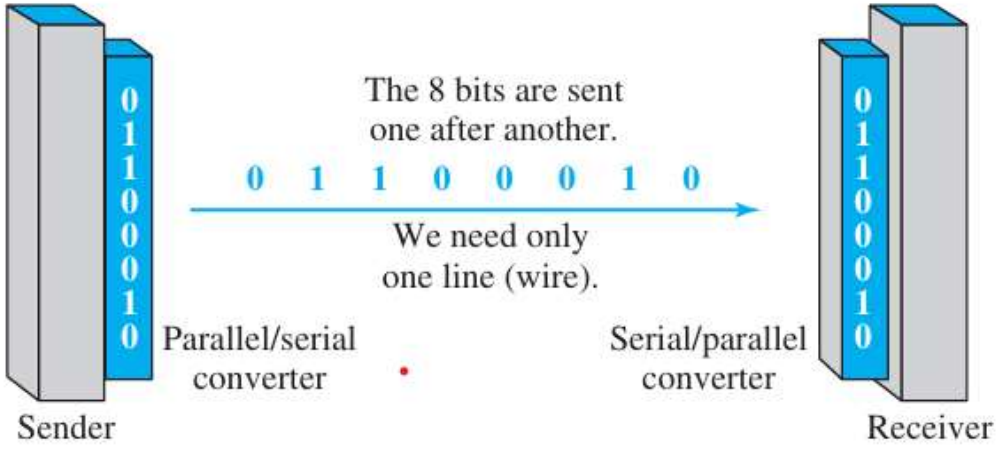


Figure 4.33 Serial transmission

- Advantage:

1) Cost: Serial transmission reduces cost of transmission over parallel by a factor of n.

- Disadvantage:

1) Since communication within devices is parallel, following 2 converters are required at interface:

• Three types of serial transmission: asynchronous, synchronous, and isochronous.

**Asynchronous Transmission**

• Asynchronous transmission is so named because the timing of a signal is not important (Figure 4.34).

• Prior to data transfer, both sender & receiver agree on pattern of information to be exchanged.

• Normally, patterns are based on grouping the bit-stream into bytes.

• The sender transmits each group to the link without regard to a timer.

• As long as those patterns are followed, the receiver can retrieve the info. without regard to a timer.

• There may be a gap between bytes.

• We send

→ 1 start bit (0) at the beginning of each byte →

1 stop bit (1) at the end of each byte.

• Start bit alerts the receiver to the arrival of a new group.

• H is finished.

the byte level".

-durations are the same.

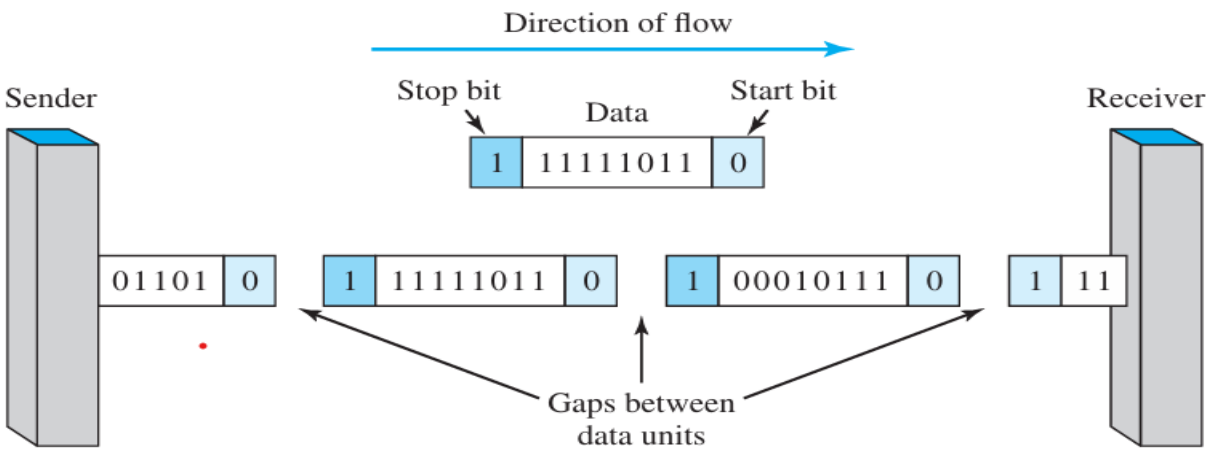


**Figure 4.34** *Asynchronous transmission*

• Disadvantage:
1) Slower than synchronous transmission. (Because of stop bit, start bit and gaps)
• Advantages:
1) Cheap & effective.
2) Useful for low-speed communication.

**Synchronous Transmission**

• The receiver is responsible for grouping the bits.
• We send bits one after another without start or stop bits or gaps (Figure 4.35).
• The bit-stream is combined into longer "frames," which may contain multiple bytes.
• If the sender wants to send data in separate bursts, the gaps b/w bursts must be filled with a special seq

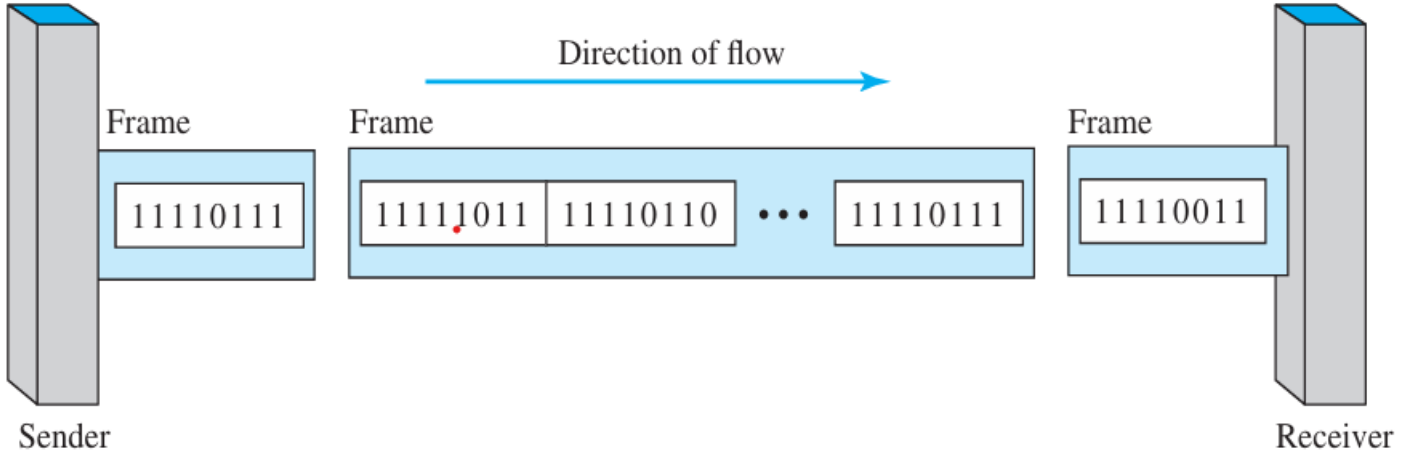


**Figure 4.35** *Synchronous transmission*

• Advantages:
1) Speed: Faster than asynchronous transmission. (no stop bit, start bit and gaps).
2) Useful for high-speed applications such as transmission of data from one computer to another.

## Isochronous

• Synchronization between characters is not enough; the entire stream of bits must be synchronized.

• The isochronous transmission guarantees that the data arrive at a fixed rate.

• In real-time audi ore, synchronous transmiss:

• For example: TV ir per second. The images mu: viewed at the same rat

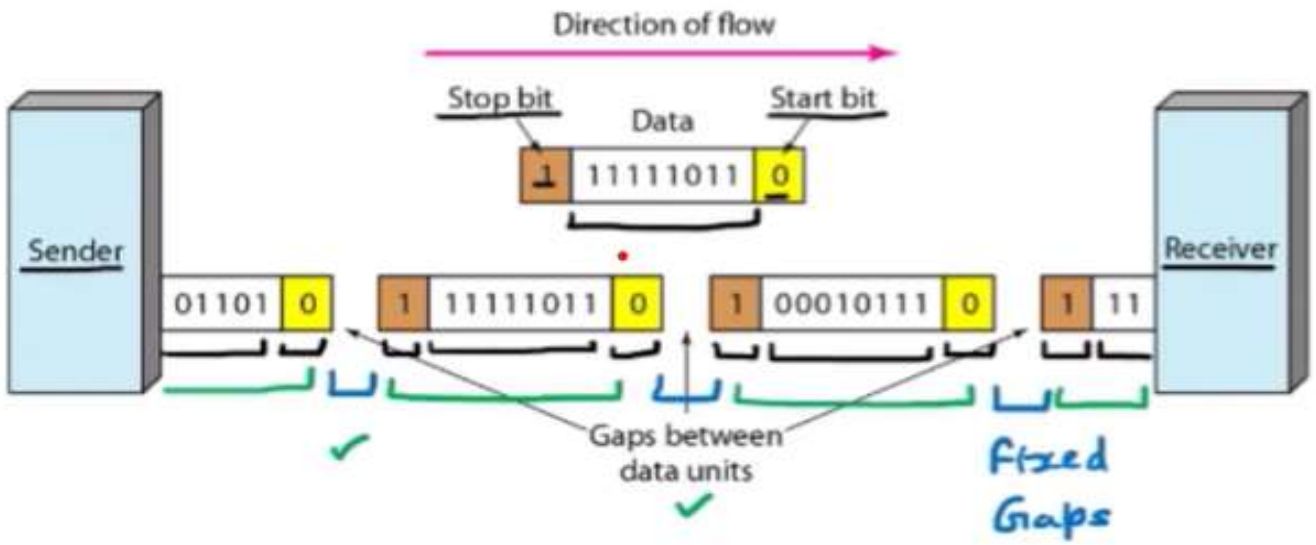

# ANALOG TRANSMISSION

## DIGITAL TO ANALOG CONVERSION

• Digital-to-analog conversion is the process of changing one of the characteristics of an analog-signal based on the information in digital-data. Fig below shows the relationship between the digital information, the digital-to-analog modulating process, and the resultant

**Figure 5.1** *Digital-to-analog conversion*

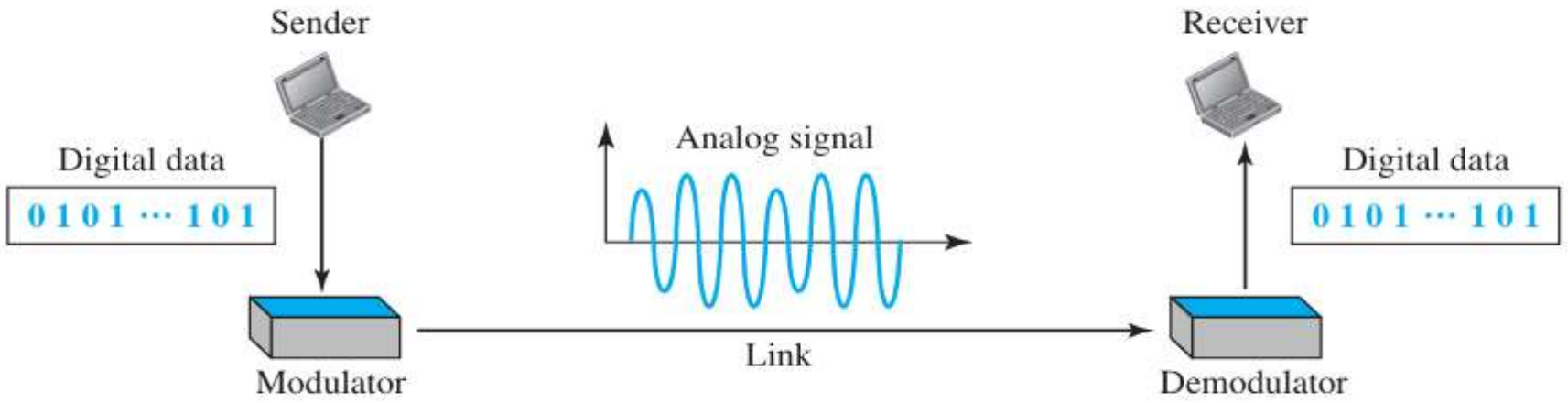

- A sine wave can be defined by 3 attributes:
    1) Amplitude
    2) Frequency
    3) Phase.
- When anyone of the 3 attributes of a wave is varied, a different version of the wave will be created.
- So, by changing one attribute of an analog signal, we can use it to represent digital-data.
- Four methods of digital to analog conversion (Figure 5.2):
    1) Amplitude shift keying (ASK)
    2) Frequency shift keying (FSK)
    3) Phase shift keying (PSK)
    4) Quadrature amplitude modulation (QAM).
- QAM is a combination of ASK and PSK i.e. QAM combines changing both the amplitude

QAM

**Figure 5.2** *Types of digital-to-analog conversion*

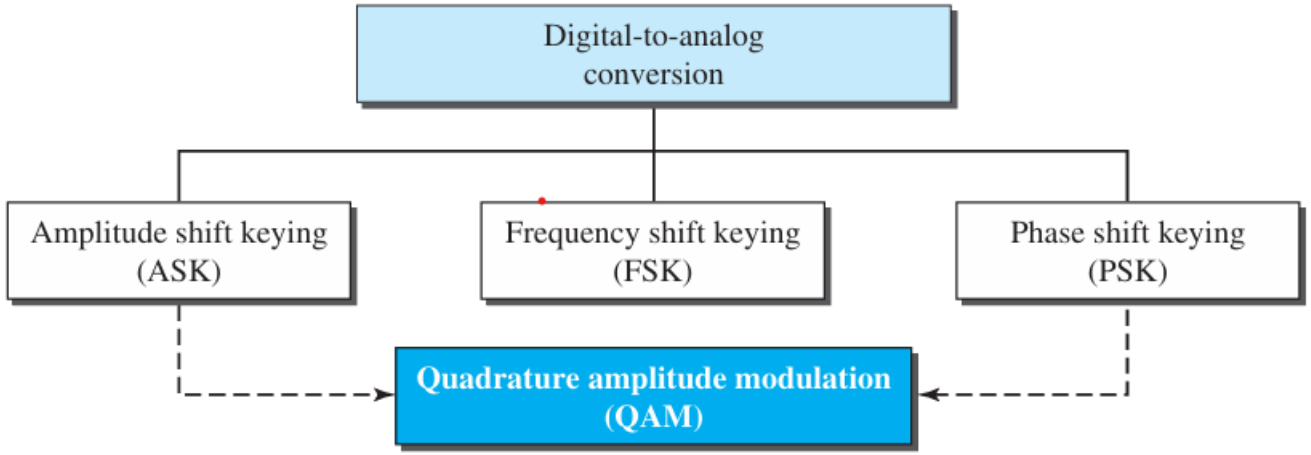

# Aspects of Digital-to-Analog Conversion

**1) Data Element vs. Signal Element**

- A data-element is the smallest piece of information to be exchanged i.e. the bit. ·

A signal-element is the smallest unit of a signal that is transmitted.

**2) Data Rate vs. Signal Rate**

- Data rate (Bit rate) is the number of bits per second.

Signal-rate (Baud rate) is the number of signal elements per second. ·

The relationship between data-rate(N) and the signal-rate(S) is

$$S = N \times \frac{1}{r} \quad \text{baud}$$

where r = number of data-elements carried in one signal-element.

- The value of r is given by

$r = \log_2 L$ or $2^r = L$

where L = type of signal-element (not the level)

(In transportation,

→ a baud is analogous to a vehicle, and

→ a bit is analogous to a passenger.

We need to maximize the number of people per car to reduce the traffic).

**3) Carrier Signal**

- The sender produces a high-frequency signal that acts as a base for the information-signal.
- This base-signal is called the carrier-signal (or carrier-frequency).
- The receiver is tuned to the frequency of the carrier-signal that it expects from the sender.
- Then, digital-information changes the carrier-signal by modifying its attributes (amplitude, frequency, or phase). This kind of modification is called modulation (shift keying).

**4) Bandwidth**

- In both ASK & PSK, the bandwidth required for data transmission is proportional to the signal-rate.
- In FSK, the bandwidth required is the difference between the two carrier-frequencies.

**Example**

An analog signal carries 4 bits per signal element. If 1000 signal elements are sent per second, find the bit rate.

**Solution**

In this case, $r = 4$, $S = 1000$, and $N$ is unknown. We can find the value of $N$ from

$$S = N \times (1/r) \quad \text{or} \quad N = S \times r = 1000 \times 4 = 4000 \text{ bps}$$

**Example**

An analog signal has a bit rate of 8000 bps and a baud rate of 1000 baud. How many data elements are carried by each signal element? How many signal elements do we need?

**Solution**

In this example, $S = 1000$, $N = 8000$, and $r$ and $L$ are unknown. We first find the value of $r$ and then the value of $L$.

$$S = N \times 1/r \longrightarrow r = N / S = 8000 / 10{,}000 = 8 \text{ bits/baud}$$

$$r = \log_2 L \longrightarrow L = 2^r = 2^8 = 256$$

# Amplitude Shift Keying (ASK)

•The amplitude of the carrier-signal is varied to represent different signal-elements.

• Both frequency and phase remain constant for all signal-elements.

## Binary ASK (BASK)

• BASK is implemented using only 2 levels. (Figure 5.3)

• This is also referred to as OOK (On-Off Keying).

**Figure 5.3** *Binary amplitude shift keying*

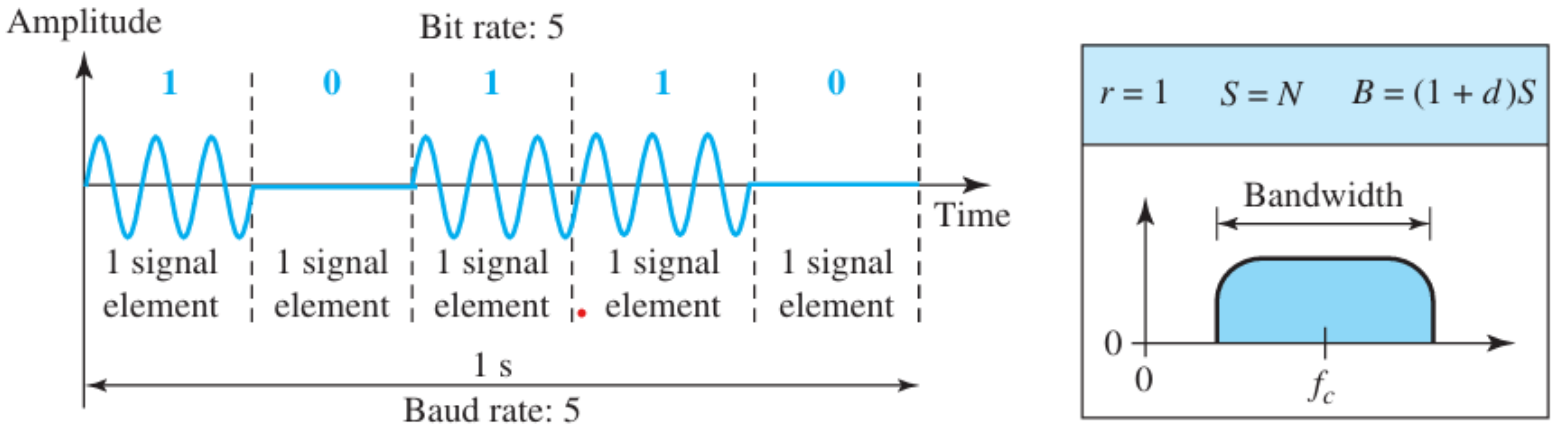

## Implementation of BASK

- Here, line coding method used = unipolar NRZ (Figure 5.4).
- The unipolar NRZ signal is multiplied by the carrier-frequency coming from an oscillator.

1) When amplitude of the NRZ signal = 0, amplitude of the carrier-signal = 0.

2) When amplitude of the NRZ signal = 1, the amplitude of the carrier-signal is

**Figure 5.4** *Implementation of binary ASK*

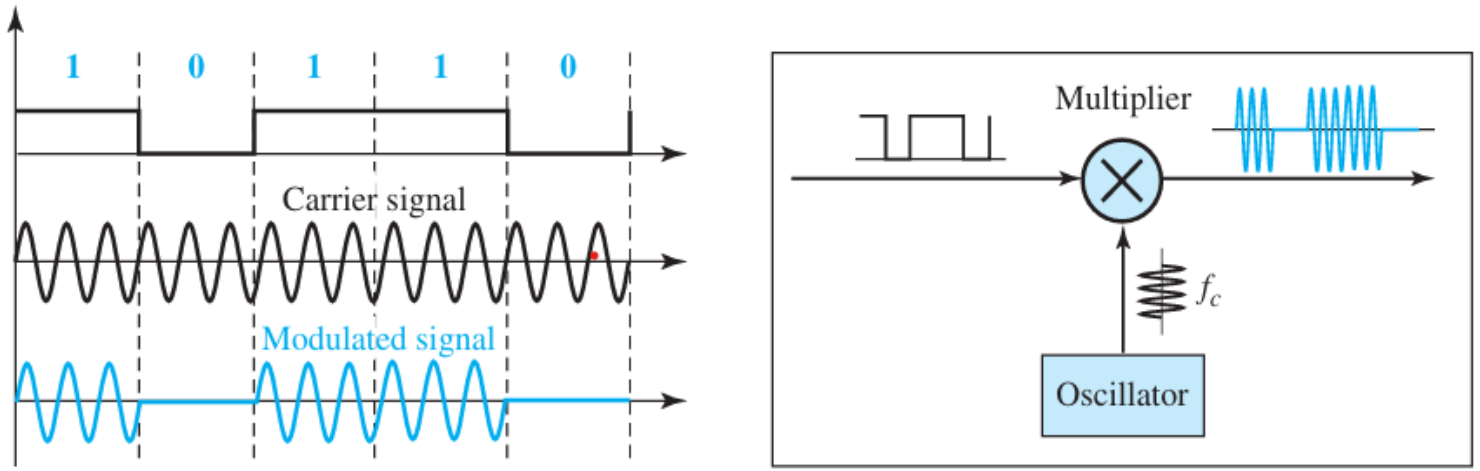

## Bandwidth for ASK

- The bandwidth is proportional to the signal-rate (S) (Figure 5.5)
- The bandwidth is given by

$$B = (1 + d) \times S$$

where d(0<d<1)= this factor depends on modulation and filtering-process.

**Figure 5.5** *Bandwidth of full-duplex ASK used in Example 5.4*

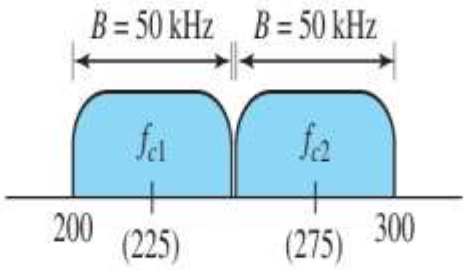


**Example**

We have an available bandwidth of 100 kHz which spans from 200 to 300 kHz. What are the carrier frequency and the bit rate if we modulated our data by using ASK with $d = 1$?

### Solution

The middle of the bandwidth is located at 250 kHz. This means that our carrier frequency can be at $f_c = 250$ kHz. We can use the formula for bandwidth to find the bit rate (with $d = 1$ and $r = 1$).

$$B = (1 + d) \times S = 2 \times N \times (1/r) = 2 \times N = 100 \text{ kHz} \longrightarrow N = 50 \text{ kbps}$$

# Frequency Shift Keying (FSK)

- The frequency of the carrier-signal is varied to represent different signal-elements.
- The frequency of the modulated-signal is constant for the duration of one signal-element, but
changes for the next signal-element if the data-element changes.
- Both amplitude and phase remain constant for all signal-elements.

# Binary FSK (BFSK)

- This uses 2 carrier-frequencies: f1 and f2. (Figure 5.6)
  1) When data-element = 1, first carrier frequency(f1) is used.

**Figure 5.6** *Binary frequency shift keying*

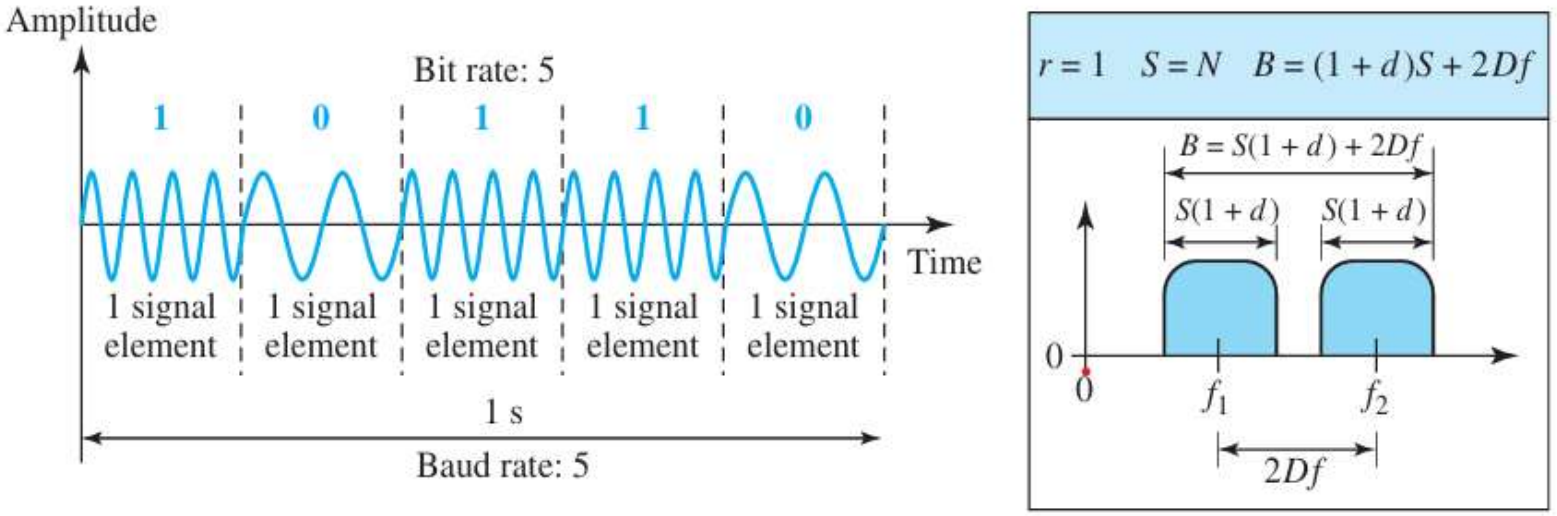

## Implementation

- Here, line coding method used = unipolar NRZ.
- Two implementations of BFSK: i) Coherent and ii) Non-Coherent.

| Coherent BFSK | Non Coherent BFSK |
|---|---|
| The phase continues through the boundary of two signal-elements (Figure 5.7). | There may be discontinuity in the phase when one signal-element ends and the next begins. |
| This is implemented by using one voltage-controlled oscillator (VCO).<br>VCO changes frequency according to the input voltage. | This is implemented by<br>→ treating BFSK as 2 ASK modulations and<br>→ using 2 carrier-frequencies |
| When the amplitude of NRZ signal = 0, the VCO keeps its regular frequency.<br>When the amplitude of NRZ signal = 0, the VCO increases its frequency. | |

**Figure 5.7** *Implementation of BFSK*

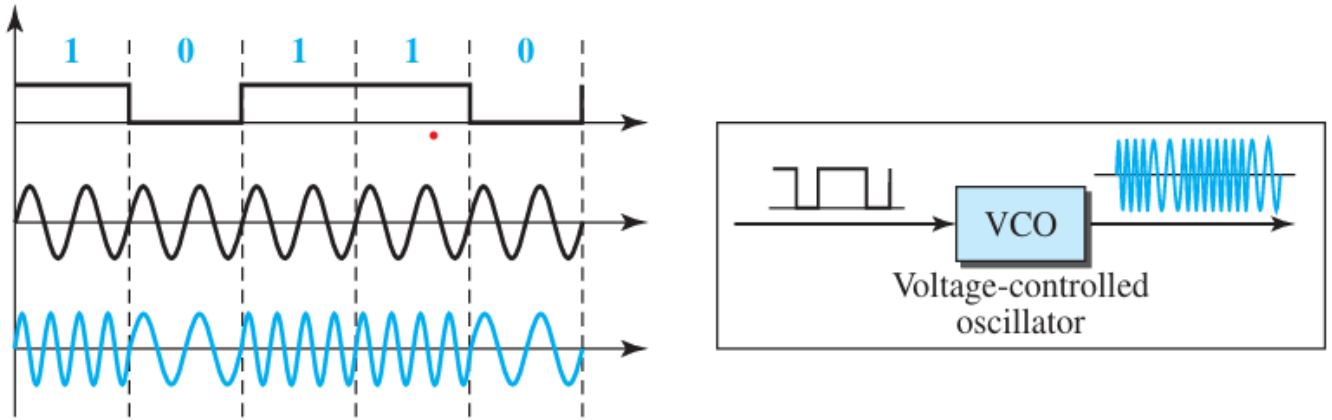

## Bandwidth for BFSK

- FSK has two ASK signals, each with its own carrier-frequency f1 or f2. (Figure 5.6)
- The bandwidth is given by

$$B = (1 + d) \times S + 2\Delta\phi$$

where 2Δf is the difference between f1 and f2,

**Example**

We have an available bandwidth of 100 kHz which spans from 200 to 300 kHz. What should be the carrier frequency and the bit rate if we modulated our data by using FSK with $d = 1$?

**Solution**

This problem is similar to Example 5.3, but we are modulating by using FSK. The midpoint of the band is at 250 kHz. We choose $2\Delta_f$ to be 50 kHz; this means

$$B = (1 + d) \times S + 2\Delta_f = 100 \longrightarrow 2S = 50\text{ kHz} \longrightarrow S = 25\text{ kbaud} \longrightarrow N = 25\text{ kbps}$$

**Example**

We need to send data 3 bits at a time at a bit rate of 3 Mbps. The carrier frequency is 10 MHz. Calculate the number of levels (different frequencies), the baud rate, and the bandwidth.

## Solution

We can have $L = 2^3 = 8$. The baud rate is $S = 3$ MHz/3 = 1 Mbaud. This means that the carrier frequencies must be 1 MHz apart ($2\Delta_f = 1$ MHz). The bandwidth is $B = 8 \times 1 = 8$ MHz. Figure 5.8 shows the allocation of frequencies and bandwidth.

**Figure 5.8** *Bandwidth of MFSK used in Example 5.6*

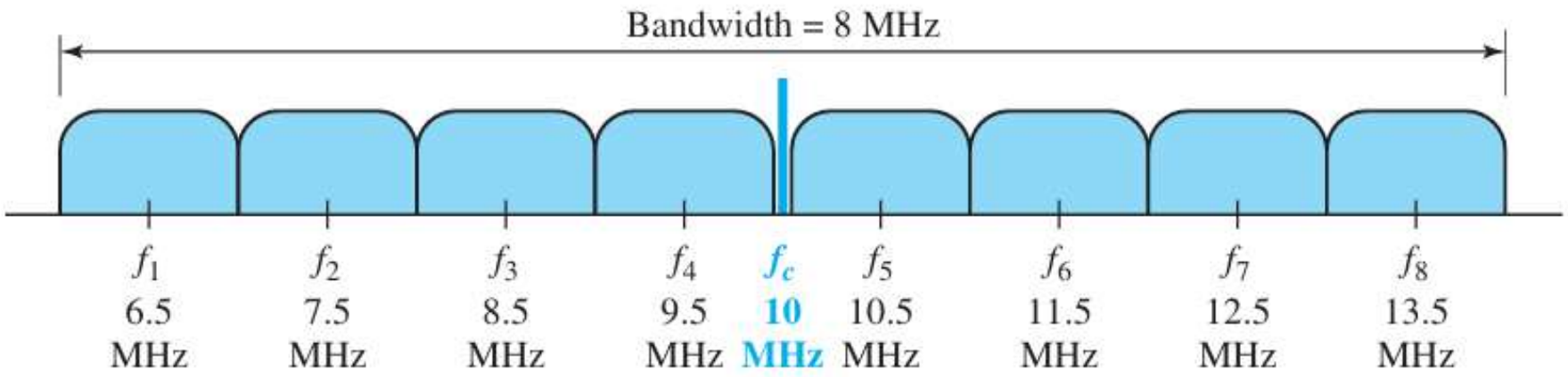

# Phase Shift Keying (PSK)

- The phase of the carrier-signal is varied to represent different signal-elements.
- Both amplitude and frequency remain constant for all signal-elements.

## Binary PSK (BPSK)

- We have only two signal-elements:
  1) First signal-element with a phase of 0°.
  2) Second signal-element with a phase of 180° (Figure 5.9).
- ASK vs. PSK

  In ASK, the criterion for bit detection is the amplitude of the signal.

  In PSK, the criterion for bit detection is the phase.
- Advantages:
  1) PSK is less susceptible to noise than ASK.
  2) PSK is superior to FSK because we do not need 2 carrier-frequencies.
- Disadvantage:

1) PSK is limit sh small differences in

**Figure 5.9** *Binary phase shift keying*

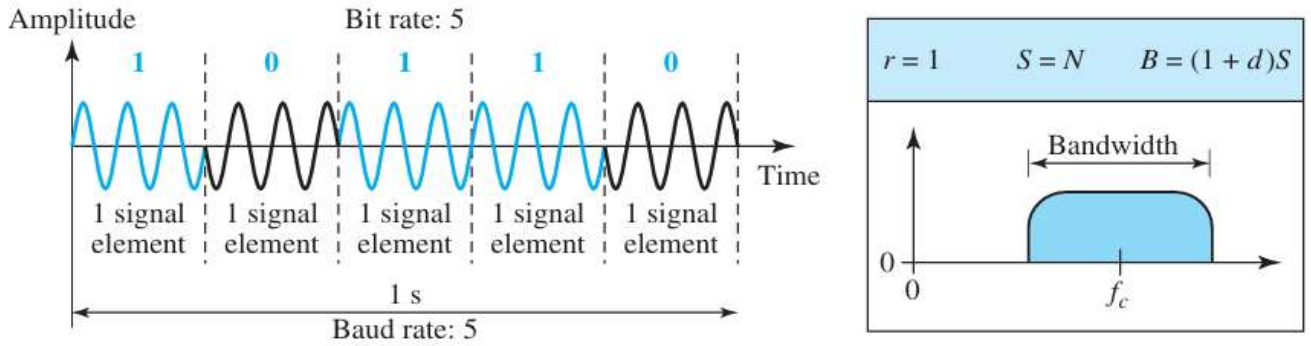

## Implementation

- The implementation of BPSK is as simple as that for ASK. (Figure 5.10). phase 0°.
- Here, line coding method used: polar NRZ.
- The signal-element with phase 180° can be seen as the complement of the signal-element with
- The polar NRZ signal is multiplied by the carrier-frequency coming from an oscillator.

1) When data-element = 1, the phase starts at 0°.
2)

**Figure 5.10** *Implementation of BASK*

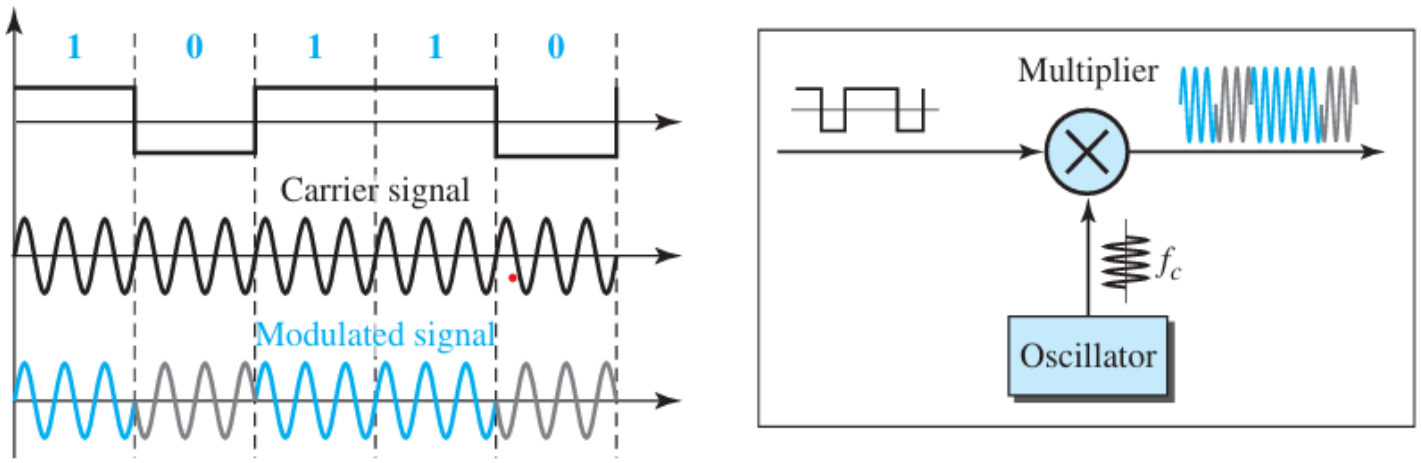

**Bandwidth for BPSK**

- The bandwidth is the same as that for BASK, but less than that for BFSK. (Figure 5.9b)
- No bandwidth is wasted for separating 2 carrier-signals.

# Quadrature PSK (QPSK)

- The scheme is called QPSK because it uses 2 separate BPSK modulations (Figure 5.11):
  1) First modulation is in-phase,
  2) Second modulation is quadrature (out-of-phase).

- A serial-to-parallel converter
  → accepts the incoming bits
  → sends first bit to first modulator and
  → sends second bit to second modulator.

- The bit to each BPSK signal has one-half the frequency of the original signal.

- Advantages:
  1) Decreases the baud rate.
  2) Decreases the required bandwidth.

**Figure 5.11** *QPSK and its implementation*

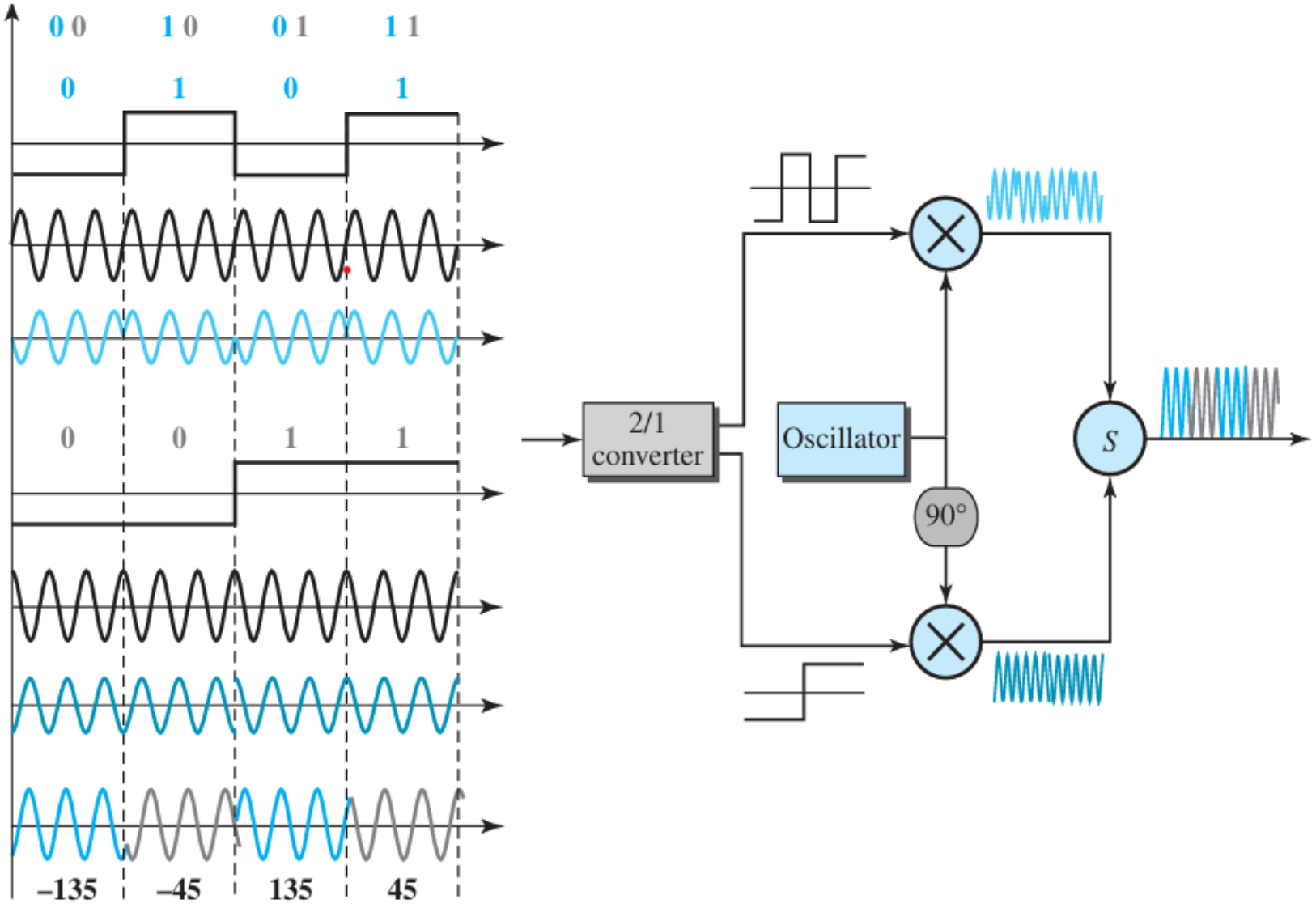


- As shown in Figure 5.11, the 2 composite-signals created by each multiplier are 2 sine waves with the same frequency, but different phases.
- When the 2 sine waves are added, the result is another sine wave, with 4 possible phases: 45°, -45°, 135°, and -135°.
- There are 4 kinds of signal-elements in the output signal (L=4), so we can send 2 bits per signal element

Find the bandwidth for a signal transmitting at 12 Mbps for QPSK. The value of $d = 0$.

**Solution**

For QPSK, 2 bits are carried by one signal element. This means that $r = 2$. So the signal rate (baud rate) is $S = N \times (1/r) = 6$ Mbaud. With a value of $d = 0$, we have $B = S = 6$ MHz.

## Constellation Diagram

- A constellation diagram can be used to define the amplitude and phase of a signal-element.
- This diagram is particularly useful
  - → when 2 carriers (one in-phase and one quadrature) are used.
  - → when dealing with multilevel ASK, PSK, or QAM.
- In a constellation diagram, a signal-element type is represented as a dot.
- The diagram has 2 axes (Figure 5.12):
  1) The horizontal X axis is related to the in-phase carrier.
  2) The vertical Y axis is related to the quadrature carrier.
- For each point on the diagram, 4 pieces of information can be deduced.
  1) The projection of point on the X axis defines the peak amplitude of the in-phase component.
  2) The projection of point on Y axis defines peak amplitude of the quadrature component.
  3) The length of the line that connects the point to the origin is the peak amplitude of the

**Figure 5.12** *Concept of a constellation diagram*

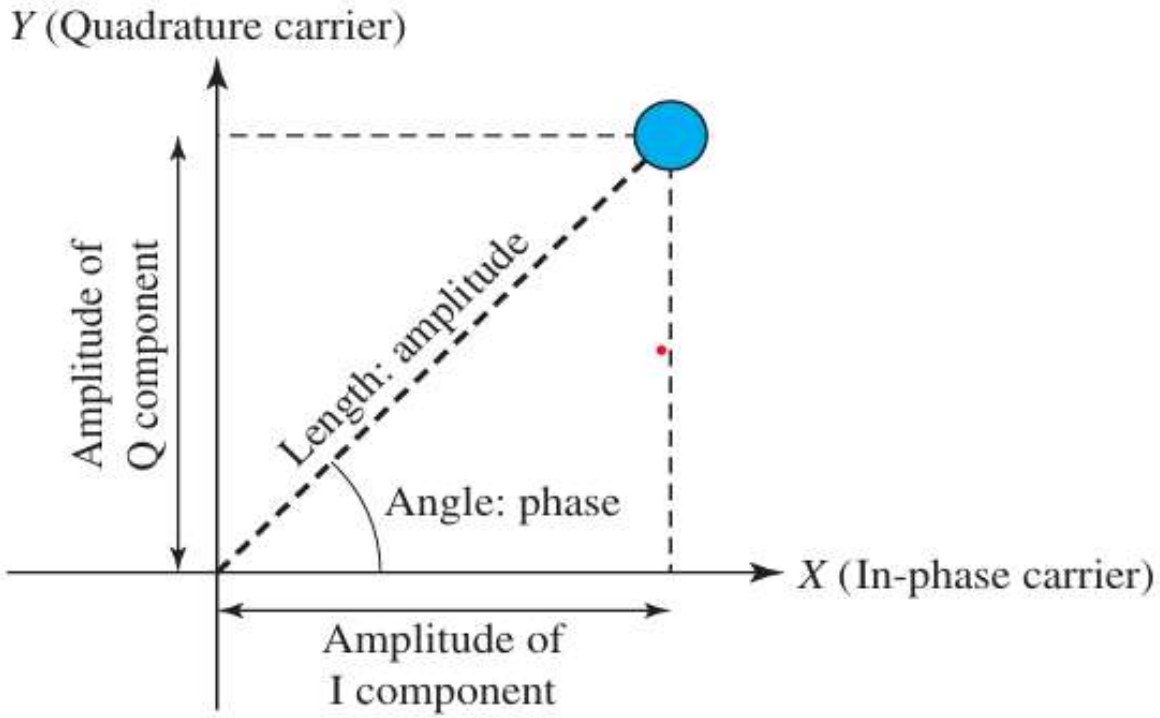

Show the constellation diagrams for ASK (OOK), BPSK, and QPSK signals.

## Solution

Figure 5.13 shows the three constellation diagrams. Let us analyze each case separately:

**Figure 5.13** *Three constellation diagrams*

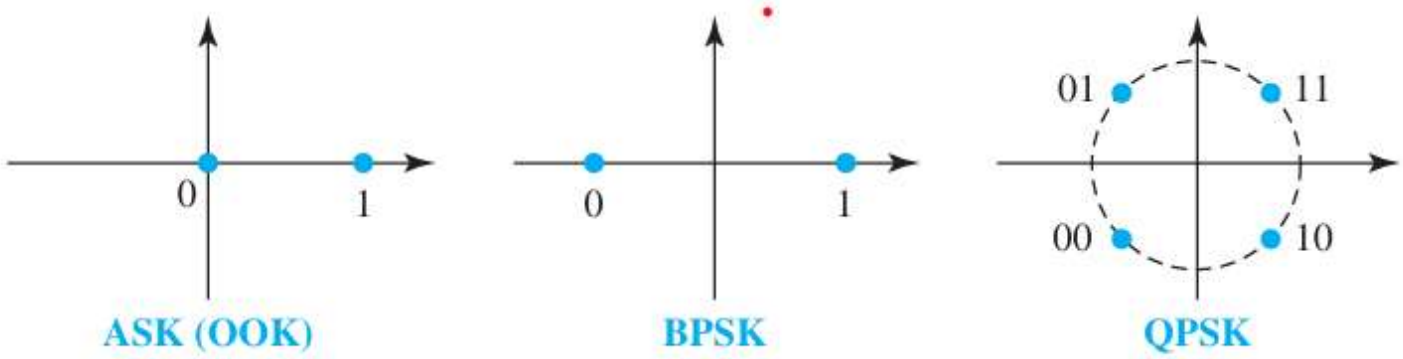


- For ASK, we are using only an in-phase carrier. Therefore, the two points should be on the $X$ axis. Binary 0 has an amplitude of 0 V; binary 1 has an amplitude of 1 V (for example). The points are located at the origin and at 1 unit.

# Quadrature Amplitude Modulation (QAM)

- This is a combination of ASK and PSK.
- Main idea: Using 2 carriers, one in-phase and the other quadrature, with different amplitude levels for each carrier.
- There are many variations of QAM (Figure 5.14).

A) Figure 5.14a shows the 4-QAM scheme using a unipolar NRZ signal. This is same as BASK.

B) Figure 5.14b shows another QAM using polar NRZ. This is the same as QPSK.

C) Figure 5.14c shows another 4-QAM in which we used a signal with 2 posi

with 8 levels

**Figure 5.14** *Constellation diagrams for some QAMs*

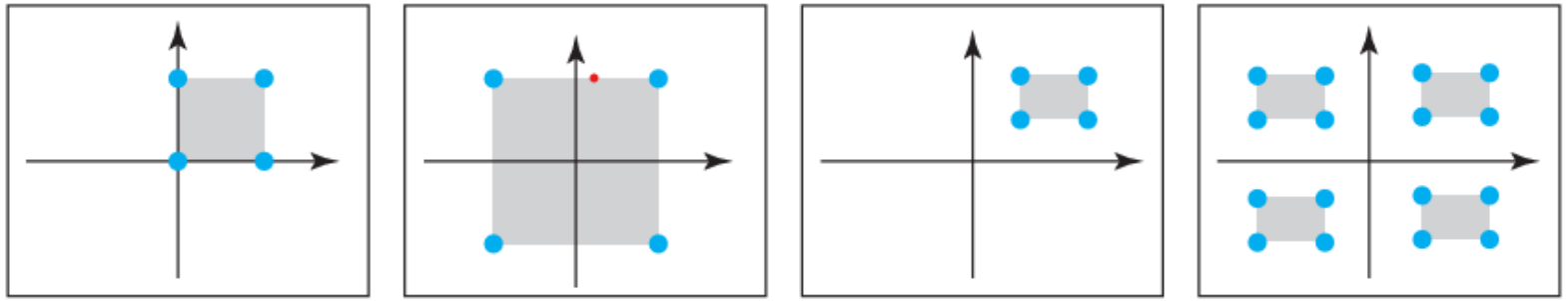

a. 4-QAM b. 4-QAM c. 4-QAM d. 16-QAM

## Bandwidth for QAM

- The bandwidth is same as in ASK and PSK transmission.
- QAM has the same advantages as PSK over ASK.